04 · KPF SERIES — LOW-PROFILE PEDESTALS

KPF Fixed 3 / 8

Stackable fixed-height pedestals in TPE or PP

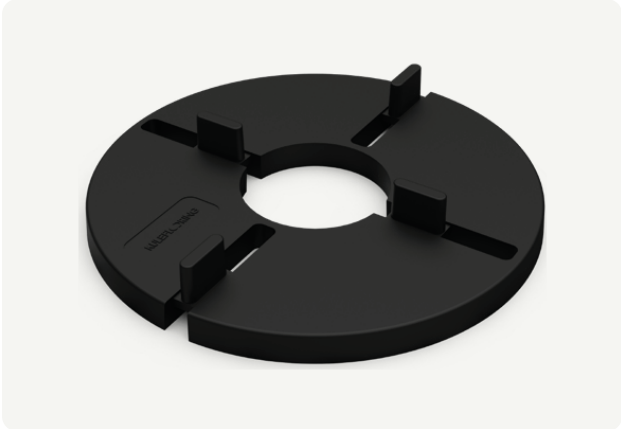

KPF Fixed pedestals are 3 mm and 8 mm discs with joint spacer fins that can be stacked in any combination to reach the required height. The TPE version is soft and anti-vibration; the PP version is rigid and economical.

3 · 8 mm Disc heights	**Ø121** mm Diameter
TPE · PP Material options	**Any** Stacking combination

MODEL RANGE

	ITEM CODE	DESCRIPTION	HEIGHT
	**KPF-Fixed3 (TPE)**	Fixed-height pedestal, stackable — TPE	3 mm
	**KPF-Fixed3 (PP)**	Fixed-height pedestal, stackable — PP	3 mm
	**KPF-Fixed8 (TPE)**	Fixed-height pedestal, stackable — TPE	8 mm
	**KPF-Fixed8 (PP)**	Fixed-height pedestal, stackable — PP	8 mm

FEATURES

- **Stackable**
  Combine 3 mm and 8 mm discs to build any height in steps.
- **Integrated joint fins**
  Spacer fins keep tile joints even.
- **Two materials**
  TPE for a softer, anti-vibration bed; PP for a rigid support.
- **Custom branding**
  Logo printing available for large orders.

APPLICATIONS

Porcelain tiles · Pavers · Balconies · Low-height terraces · Interior raised areas

TECHNICAL DRAWINGS

All dimensions in mm

KPF-Fixed3

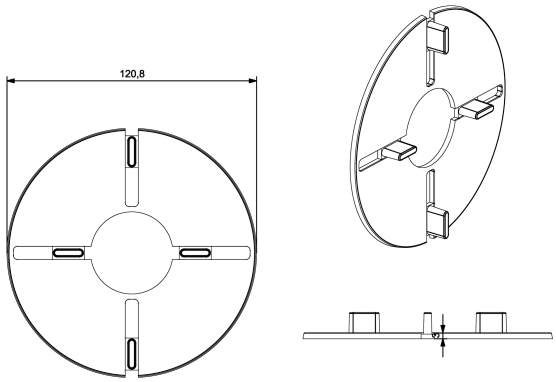

Ø120.8 × 3 mm

KPF-Fixed8

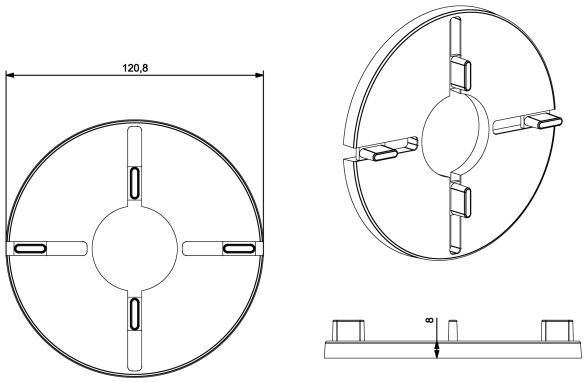

Ø120.8 × 8 mm

KPF-Fixed3 · stacked

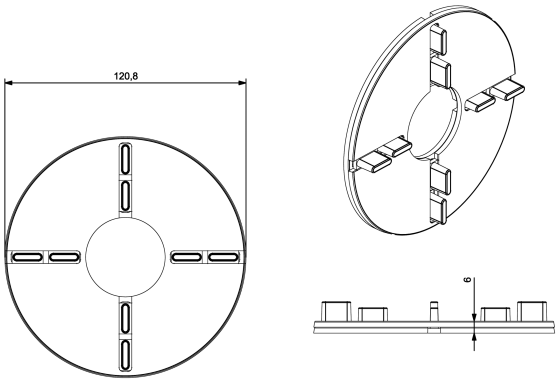

Two discs stacked

KPF-Fixed8 · stacked

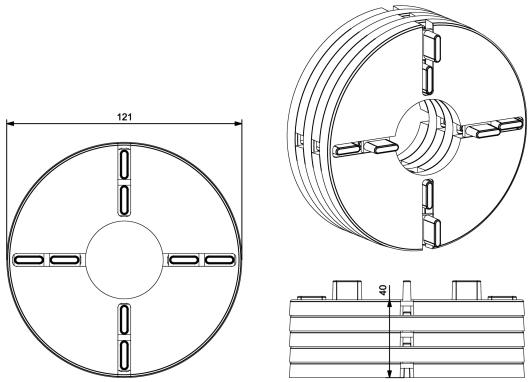

Five discs stacked · 40 mm

MATERIAL & PERFORMANCE

Material	TPE or polypropylene (PP)
Colour	Black
HS code	3925.90.80

RESISTANT TO

- UV & weathering
- Water, frost & moisture
- Rot & corrosion
- Algae & salt environments

SYSTEM DATA

Heights	3 mm · 8 mm per disc
Diameter	Ø120.8 mm
Stacking	Any combination
Joint	Integrated spacer fins

PACKAGING & LOGISTICS

Supplied in export cartons on stretch-wrapped pallets. Pieces per carton, pieces per pallet and container/truck quantities are confirmed with each quotation.

Samples, technical documentation and test reports are available on request.

SALES ENQUIRIES
sales@kuleflooring.com
www.kuleflooring.com

Kule Flooring reserves the right to change specifications without notice. Values are typical and should be verified for project-specific design.