04 · KPF SERIES — LOW-PROFILE PEDESTALS

KPF-10

Low-profile adjustable pedestal, 10–15 mm, with heads for tiles, carcass and profiles



KPF-10 is a low-profile pedestal for installations where build-up height is very limited, such as balconies and renovation over existing floors. A threaded mechanism adjusts it between 10 and 15 mm; versions are available for tiles, carcass joists and aluminium profiles.

10–15 mm Adjustable height	**Ø148.6** mm Base diameter
+5 mm With KA-PFB-05 extender	**4** Head versions

MODEL RANGE

	ITEM CODE	DESCRIPTION	OPTIONS
	**KPF-10**	Base pedestal, adjustable 10–15 mm via threaded mechanism	—
	**KPF-10-SX**	KPF-10 for tiles, with joint spacer	S2 · S3 · S4 · S5
	**KPF-10-CW3**	KPF-10 for carcass joists	CW3
	**KPF-10-PF**	KPF-10 for aluminium profile	40 mm
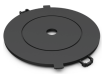	**KA-PFB-05**	Extender for KPF-10, increases height by 5 mm	5 mm

FEATURES

- **Very low build-up**
  From 10 mm — for balconies, thresholds and overlays.
- **Threaded adjustment**
  Fine adjustment between 10 and 15 mm.
- **Four head versions**
  Plain, joint spacer, carcass or aluminium profile.
- **Extendable**
  KA-PFB-05 adds 5 mm when more height is needed.
- **Handle tab**
  Moulded tab for easy turning and positioning.

APPLICATIONS

Porcelain tiles · Decking on low joists · Aluminium profiles · Balconies · Renovation overlays

TECHNICAL DRAWINGS

All dimensions in mm

KPF-10

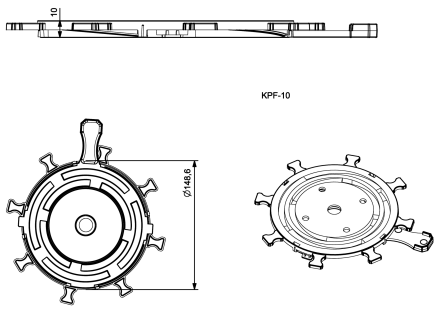

Base pedestal · Ø148.6 · 10–15 mm

KPF-10-SX

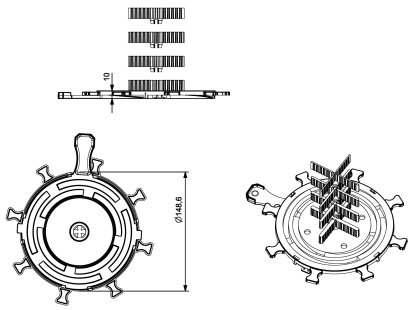

With joint spacer S2–S5

KPF-10-CW3

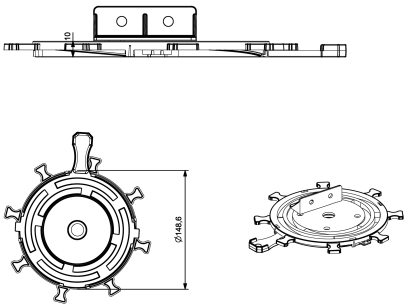

With carcass head

KPF-10-PF

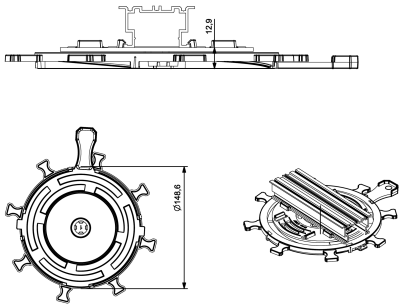

With 40 mm aluminium profile

KA-PFB-05 extender

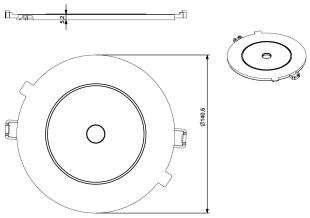

Ø140.5 · +5 mm

MATERIAL & PERFORMANCE

Material	Polypropylene (PP), recycled content
Service temperature	−30 °C to +80 °C
Colour	Black
HS code	3925.90.80

RESISTANT TO

- UV & weathering
- Water, frost & moisture
- Common construction chemicals
- Rot & corrosion
- Algae & salt environments

SYSTEM DATA

Height	10–15 mm (+5 mm with KA-PFB-05)
Base	Ø148.6 mm
Adjustment	Threaded mechanism
Versions	Plain · SX · CW3 · PF

PACKAGING & LOGISTICS

Supplied in export cartons on stretch-wrapped pallets. Pieces per carton, pieces per pallet and container/truck quantities are confirmed with each quotation.

Samples, technical documentation and test reports are available on request.

SALES ENQUIRIES
sales@kuleflooring.com
www.kuleflooring.com

Kule Flooring reserves the right to change specifications without notice. Values are typical and should be verified for project-specific design.