01 · KP-PRM SERIES — PREMIUM ADJUSTABLE PEDESTALS

KP-PRM Sloped Joint SX

Self-levelling pedestal with pivoting joint-spacer head (up to 5°)



The KP-PRM Sloped Joint SX pedestal has a pivoting head that follows the fall of the substrate automatically, correcting up to 5° so the finished surface stays level. The head carries a joint spacer for tiles, natural stone and pavers.

34–217 mm
Height range in 4 models

0–5 °
Self-levelling slope correction

2 · 3 · 4 · 5 mm
Joint spacer options

+125 mm
With KP-PRM EXTENDER 125

MODEL RANGE

	ITEM CODE	MIN. HEIGHT mm, closed	MAX. HEIGHT mm, extended	ADJUSTMENT mm	HEAD / JOINT
	KP-PRM 34–47 SLOPED JOINT SX	34	47	13	S2 · S3 · S4 · S5
	KP-PRM 48–72 SLOPED JOINT SX	48	72	24	S2 · S3 · S4 · S5
	KP-PRM 72–120 SLOPED JOINT SX	72	120	48	S2 · S3 · S4 · S5
	KP-PRM 121–217 SLOPED JOINT SX	121	217	96	S2 · S3 · S4 · S5

FEATURES

- **Self-levelling head**
  The head pivots freely and settles on the slab fall — up to 5° correction.
- **No shims or wedges**
  Slope is compensated in the head; no extra slope pads are needed.
- **Threaded height adjustment**
  Continuous adjustment from closed to fully extended height.
- **Choice of joint width**
  2, 3, 4 or 5 mm spacer fins (S2–S5) for consistent, even joints.
- **Trimmable base**
  Break-off “CUT MAX” lines let the base be cut for walls, edges and corners.
- **Higher levels**
  Combine with KP-PRM EXTENDER 125 for raised floors above the standard range.

APPLICATIONS

Porcelain tiles · Natural stone · Concrete pavers · Sloped roof terraces · Balconies · Plazas & pool decks



KP-PRM EXTENDER 125
+125 mm extension for higher raised-floor levels. Sold separately.

TECHNICAL DRAWINGS

All dimensions in mm

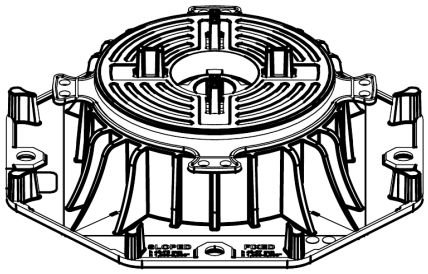

Isometric view

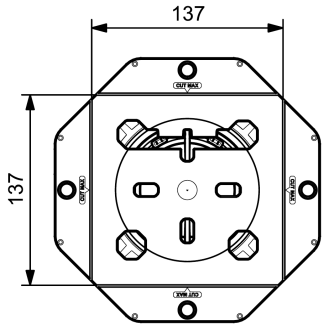

Base plate · top view · 137 × 137 mm (all models)

KP-PRM 34–47 SLOPED JOINT SX

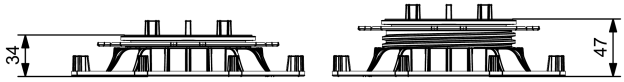

Closed · 34 mm | Extended · 47 mm

KP-PRM 48–72 SLOPED JOINT SX

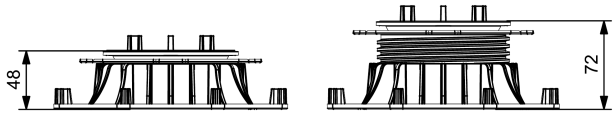

Closed · 48 mm | Extended · 72 mm

KP-PRM 72–120 SLOPED JOINT SX

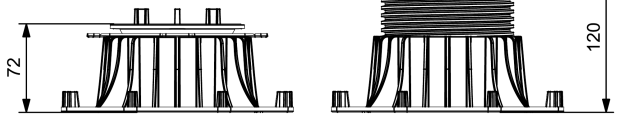

Closed · 72 mm | Extended · 120 mm

KP-PRM 121–217 SLOPED JOINT SX

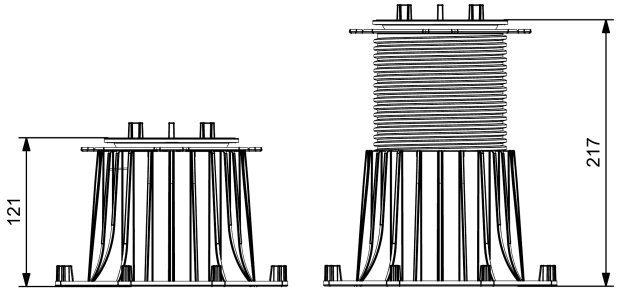

Closed · 121 mm | Extended · 217 mm

MATERIAL & PERFORMANCE

Material	Polypropylene (PP), recycled content
Service temperature	−30 °C to +80 °C
Load capacity	Testing to TS 13776 in progress — available on request
Colour	Black
HS code	3925.90.80

RESISTANT TO

- UV & weathering
- Water, frost & moisture
- Common construction chemicals
- Rot & corrosion
- Algae & salt environments

SYSTEM DATA

Head type	Pivoting self-levelling head with joint spacer
Joint / support	S2 · S3 · S4 · S5
Slope correction	Up to 5°, self-levelling
Height adjustment	Threaded body, continuous
Base plate	137 × 137 mm, octagonal, trimmable
Extension	KP-PRM EXTENDER 125 (+125 mm)

PACKAGING & LOGISTICS

Supplied in export cartons on stretch-wrapped pallets. Pieces per carton, pieces per pallet and container/truck quantities differ by model and are confirmed with each quotation.

Samples, technical documentation and test reports are available on request.

SALES ENQUIRIES
sales@kuleflooring.com
www.kuleflooring.com

Elevation drawings are shown at a common scale. Kule Flooring reserves the right to change specifications without notice. Values are typical and should be verified for project-specific design.