01 · KP-PRM SERIES — PREMIUM ADJUSTABLE PEDESTALS

KP-PRM Fixed

Fixed-head adjustable pedestal with integrated joint spacer



The KP-PRM Fixed pedestal supports porcelain tiles, natural stone and concrete pavers on raised outdoor and indoor floors. The fixed head carries an integrated joint spacer, so each pedestal is installed as one piece and adjusted to height by turning the threaded body.

29–212 mm
Height range in 4 models

137 × 137 mm
Base plate

2 · 3 · 4 · 5 mm
Joint spacer options

+125 mm
With KP-PRM EXTENDER 125

MODEL RANGE

	ITEM CODE	MIN. HEIGHT mm, closed	MAX. HEIGHT mm, extended	ADJUSTMENT mm	HEAD / JOINT
	KP-PRM 29–42 FIXED	29	42	13	S2 · S3 · S4 · S5
	KP-PRM 43–67 FIXED	43	67	24	S2 · S3 · S4 · S5
	KP-PRM 67–115 FIXED	67	115	48	S2 · S3 · S4 · S5
	KP-PRM 116–212 FIXED	116	212	96	S2 · S3 · S4 · S5

FEATURES

- **One-piece system**
  Head and joint spacer are integrated — no separate head to fit on site.
- **Threaded height adjustment**
  Continuous adjustment from closed to fully extended height.
- **Choice of joint width**
  2, 3, 4 or 5 mm spacer fins (S2–S5) for consistent, even joints.
- **Trimmable base**
  Break-off “CUT MAX” lines let the base be cut for walls, edges and corners.
- **Anchoring points**
  Fixing holes in the base plate for mechanical fastening where required.
- **Higher levels**
  Combine with KP-PRM EXTENDER 125 for raised floors above the standard range.

APPLICATIONS

Porcelain tiles · Natural stone · Concrete pavers · Roof terraces · Balconies · Plazas & pool decks



KP-PRM EXTENDER 125
+125 mm extension for higher raised-floor levels. Sold separately.

TECHNICAL DRAWINGS

All dimensions in mm

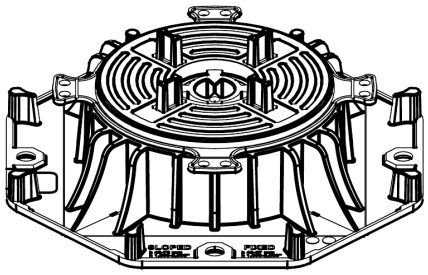

Isometric view

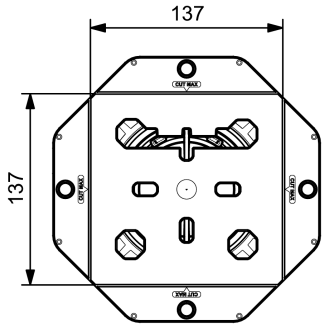

Base plate · top view · 137 × 137 mm (all models)

KP-PRM 29–42 FIXED

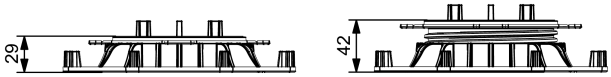

Closed · 29 mm | Extended · 42 mm

KP-PRM 43–67 FIXED

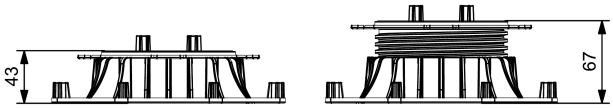

Closed · 43 mm | Extended · 67 mm

KP-PRM 67–115 FIXED

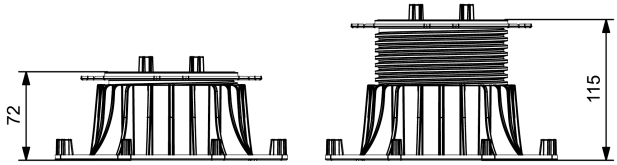

Closed · 67 mm | Extended · 115 mm

KP-PRM 116–212 FIXED

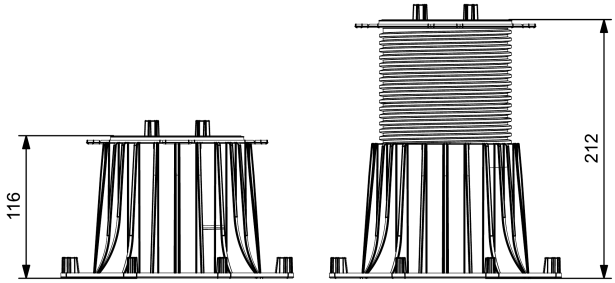

Closed · 116 mm | Extended · 212 mm

MATERIAL & PERFORMANCE

Material	Polypropylene (PP), recycled content
Service temperature	−30 °C to +80 °C
Load capacity	Testing to TS 13776 in progress — available on request
Colour	Black
HS code	3925.90.80

RESISTANT TO

- UV & weathering
- Water, frost & moisture
- Common construction chemicals
- Rot & corrosion
- Algae & salt environments

SYSTEM DATA

Head type	Fixed head, integrated joint spacer
Joint / support	S2 · S3 · S4 · S5
Slope correction	—
Height adjustment	Threaded body, continuous
Base plate	137 × 137 mm, octagonal, trimmable
Extension	KP-PRM EXTENDER 125 (+125 mm)

PACKAGING & LOGISTICS

Supplied in export cartons on stretch-wrapped pallets. Pieces per carton, pieces per pallet and container/truck quantities differ by model and are confirmed with each quotation.

Samples, technical documentation and test reports are available on request.

SALES ENQUIRIES
sales@kuleflooring.com
www.kuleflooring.com

Elevation drawings are shown at a common scale. Kule Flooring reserves the right to change specifications without notice. Values are typical and should be verified for project-specific design.