06 · DECKING ACCESSORIES — CONCEALED DECK FASTENING

Decking Accessories

Terrace handle, concealed clip and distance strip for timber and WPC decks



KA-TH1 Terrace handle

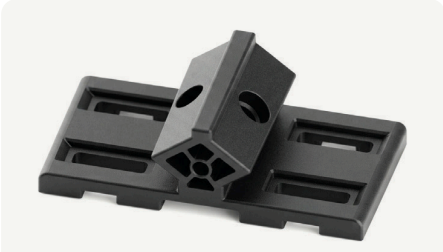

CL2 Concealed clip



DISTANCE STRIP 30 × 700 × 7 mm

Fixing accessories for timber and WPC decking on joists. KA-TH1 and CL2 fasten boards invisibly from the side and keep a ventilation gap above the substructure; the Distance Strip separates boards from joists for visible fixing and airflow.

190 × 18 mm KA-TH1 terrace handle	**4.5** mm CL2 board joint	**7** mm Distance Strip separation	**10** mm KA-TH1 ventilation gap

MODEL RANGE

	ITEM CODE	DESCRIPTION	SIZE
	**KA-TH1**	Terrace handle — concealed deck fastening, 10 mm ventilation gap above the substructure	190 × 18 × 10 mm
	**CL2**	Concealed deck-board fixing clip — 4.5 mm board joint, 5 mm stand-off for airflow	66 × 36 × 21 mm
	**Distance Strip**	Ventilated decking spacer for visible board fixing on timber substructures; 7 mm separation	30 × 700 × 7 mm

FEATURES

- **Hidden fixing**
  KA-TH1 and CL2 leave the deck surface free of screw heads.
- **Ventilation**
  Stand-off above the joist lets air circulate and boards dry out.
- **Even joints**
  CL2 sets a consistent 4.5 mm board joint.
- **Longer deck life**
  Distance Strip keeps boards off the joist to prevent trapped moisture.

APPLICATIONS

Timber decking · WPC decking · Roof terraces · Pool decks

TECHNICAL DRAWINGS

All dimensions in mm

KA-TH1 terrace handle

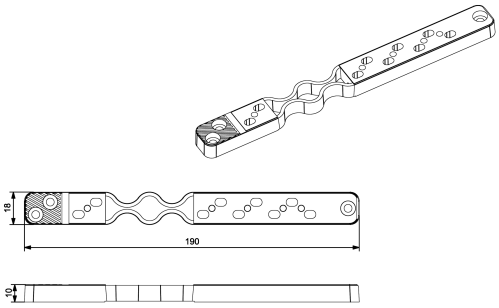

190 × 18 × 10 mm

CL2 concealed clip

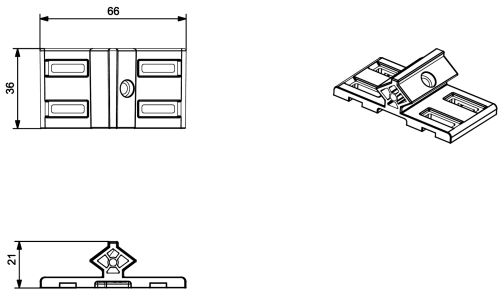

66 × 36 × 21 mm

Distance Strip

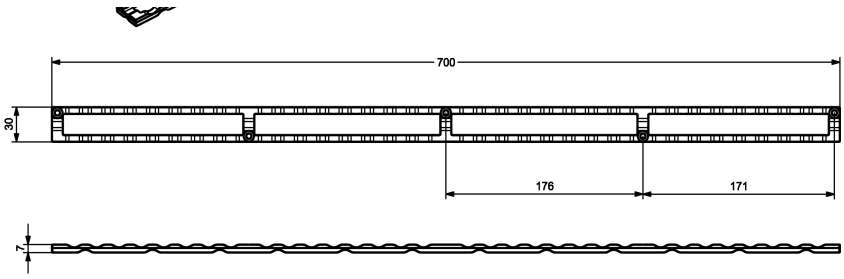

Plan & side view · 700 × 30 × 7 mm



Isometric view

MATERIAL & PERFORMANCE

Material	Polymer — specification on request
Colour	Black
HS code	3925.90.80

RESISTANT TO

- UV & weathering
- Water, frost & moisture
- Rot & corrosion

SYSTEM DATA

KA-TH1	190 × 18 × 10 mm
CL2	4.5 mm joint, 5 mm stand-off
Distance Strip	30 × 700 × 7 mm
Substructure	Timber, WPC or aluminium joists

PACKAGING & LOGISTICS

Supplied in export cartons on stretch-wrapped pallets. Pieces per carton, pieces per pallet and container/truck quantities are confirmed with each quotation.

Samples, technical documentation and test reports are available on request.

SALES ENQUIRIES
sales@kuleflooring.com
www.kuleflooring.com

Kule Flooring reserves the right to change specifications without notice. Values are typical and should be verified for project-specific design.